# PLACA CARRIER PARA DOS STAMP - DSAUX4C



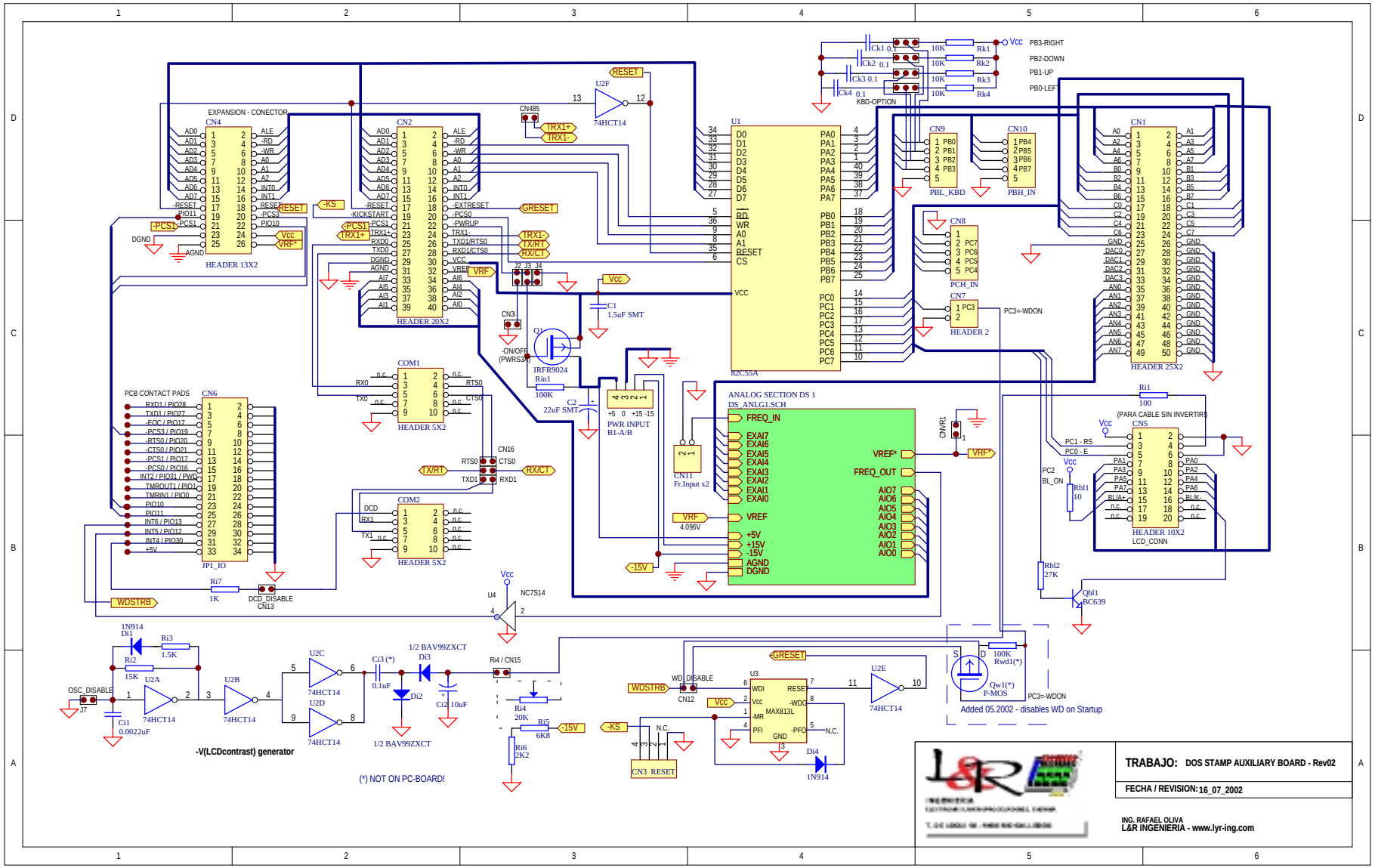

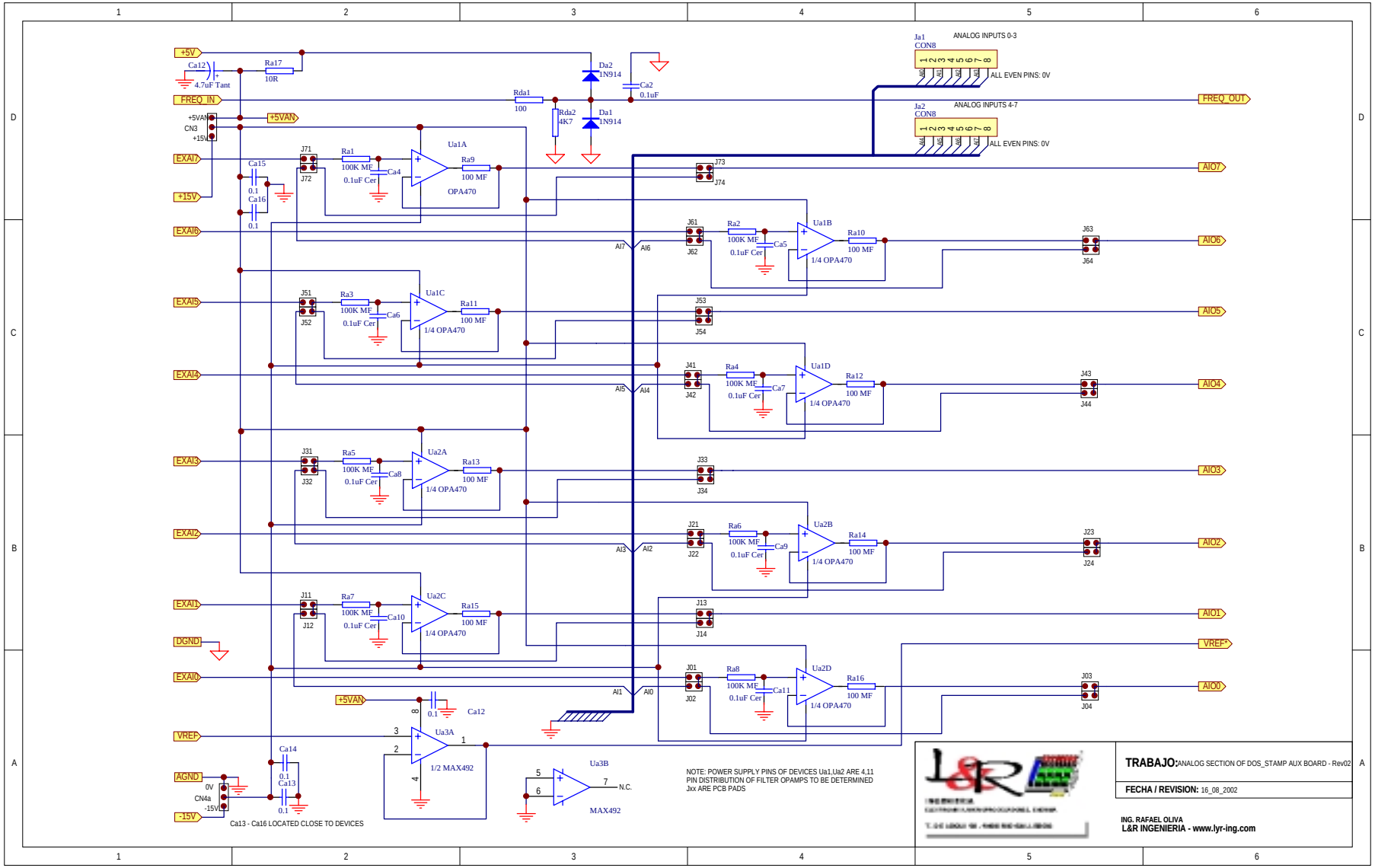
+5V
Ca12
4.7uF Tant
Ra17
10R
FREQ_IN
+5VAN
CN3
+15V
EXAI7
EXAI6
EXAI5
EXAI4
EXAI3
EXAI2
EXAI1
DGND
EXAI0
VREF
AGND
CN4a
0V
-15V
Ca15
0.1
Ca16
0.1
J71
J72
Ra1
100K MF
0.1uF Cer
Ca4
Ua1A
Ra9
100 MF
OPA470
J51
J52
Ra3
Ca6
Ua1C
Ra11
1/4 OPA470
J31
J32
Ra5
Ca8
Ua2A
Ra13
J11
J12
Ra7
Ca10
Ua2C
Ra15
Ca14
Ca13
Ca13 - Ca16 LOCATED CLOSE TO DEVICES
Ua3A
1/2 MAX492
Ua3B
MAX492
N.C.
Rda1
100
Rda2
4K7
Da2
1N914
Da1
1N914
Ca2
0.1uF
Ja1
CON8
ANALOG INPUTS 0-3
ALL EVEN PINS: 0V
Ja2
CON8
ANALOG INPUTS 4-7
ALL EVEN PINS: 0V
FREQ_OUT
AIO7
AIO6
AIO5
AIO4
AIO3
AIO2
AIO1
VREF*
AIO0
J73
J74
J61
J62
Ra2
Ca5
Ua1B
Ra10
J63
J64
J53
J54
J41
J42
Ra4
Ca7
Ua1D
Ra12
J43
J44
J33
J34
J21
J22
Ra6
Ca9
Ua2B
Ra14
J23
J24
J13
J14
J01
J02
Ra8
Ca11
Ua2D
Ra16
J03
J04
AI7
AI6
AI5
AI4
AI3
AI2
AI1
AI0
NOTE: POWER SUPPLY PINS OF DEVICES Ua1,Ua2 ARE 4,11
PIN DISTRIBUTION OF FILTER OPAMPS TO BE DETERMINED
Jxx ARE PCB PADS
TRABAJO: ANALOG SECTION OF DOS_STAMP AUX BOARD - Rev02
FECHA / REVISION: 16_08_2002
ING. RAFAEL OLIVA
L&R INGENIERIA - www.lyr-ing.com